©COPYRIGHT by MEIKO

1.0	machine connection: drain connection hose, DN 22 hose fitted as odour trap in interior of machine
1.1	drain (max. 300 mm above finished floor level), DN 50
2.0	Machine connection: fresh water supply, G 3/4"
2.5	Cold water 10°C, 20 DN, G 3/4 a Flow rate: total 4.3 l/min (at 15 °C inlet temperature and a flow pressure of 200 kPa / 2 bar) electrical conductibility < 1000 µS/cm Minimum flow pressure: 100 kPa / 1.0 bar in front of solenoid valve Maximum pressure: 500 kPa / 5.0 bar in front of pressure reducer stopcock and fine screen ≤ 25 µm
3.0	Machine connection: electrical connection cable 5G 4.0mm²
3.1	electricity supply to the machine: 3N PE 400V ~ 50Hz nominal current / - capacity: 19.6 A / 12.4 kW Fuse protection: 25 A ⏚ Voltage equalising cable
6.0	Heat load of warewash area
6.1	for 6 programme cycles/h total 0.6 kW, perceptible 0.4 kW, latent 0.2 kW

all cables, pipes etc leaving machine 1,6 m

the position of the connection piping can also be mirror-inverted!

Machine Equipment

Thermal disinfection

(A) Entry height

Rinse agent pipe and suction lance with empty indicator (blue connector)

Detergent pipe and suction lance with empty indicator

GiO MODULE (plinth, 120 mm)

A0-60

Back wall cladding

⚠ Please observe the installation indications of the additional document MP_T-INFO-GIO_EN.pdf

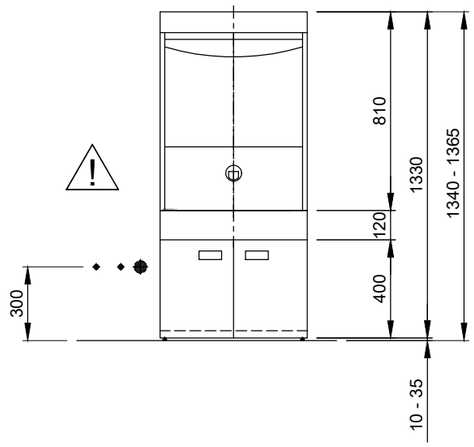

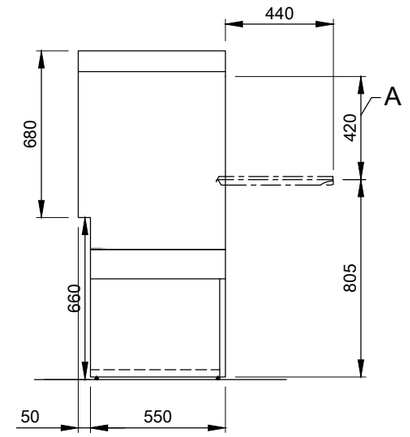

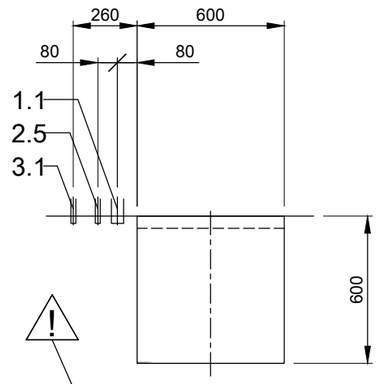

Please note:
Additional installation components are necessary (connection and drain kits)

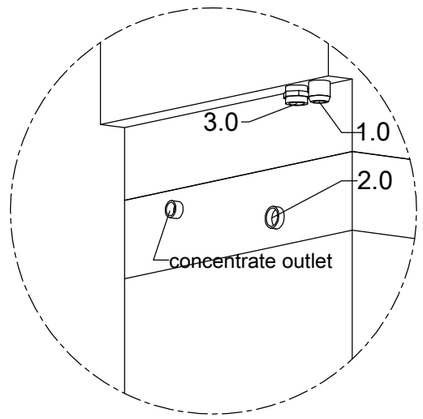

MEIKO Wash-Up Technologies LTD. N0.2,Jingye Road
Torch High Tech Industrial Development Zone Zhongshan,
Guangdong,P.R.C, Postal code: 528437
Tel:+86 (0)760 85317591 Fax:+86 (0)760 85314217
Website: http://www.meiko.de http://www.meikochina.com

This drawing may not be neither passed to third parties for their information or copied or used for competitive purposes without our consent. All rights reserved. We reserve the right to make changes resulting from technical progress. This drawing was computer generated and is not subject to the checking and any release process; it is also not subject to change management.
Please note:
This document is only valid in conjunction with the conditions defined in Supplementary Sheet "Important Information". These can be requested from the manufacturer or downloaded from the Partnernet.

Revision		
Reference TOPCLEAN STANDARD DRAWING / CHN		Type TOPCLEAN 60 M2 GIO MODULE PLINTH A0-60
Drawing-No. S00104106		Order-No.
Scale 1:25	drawn: 21.02.2021 m-iplan	checked: 21.02.2021 m-iplan

OM000034072.1.7

©COPYRIGHT by MEIKO

CHN EN

©COPYRIGHT by MEIKO